PRODUCT DATA SHEET

600 Basin Cab Blue

Product Code: 600CAB-LILI-BLUE

0330 124 7290

sales@scudo.co.uk - www.scudo.co.uk

Scudo is the trading name of Harrison Bathrooms Ltd. Whilst we endevour to ensure that the product information is accurate we accept no liability for any information given. All images are for illustration purposes only. Product images and specification are subject to change. Measurement are in millimetres and are nominal.

Product Name	600CAB-LILI-BLUE
Product Decription	Lili 600 Basin Cab Blue
Product Transportation	
Barcode	5060766125084
Contry of origin	China
Comodity code	9403609000
Product Mesurements	
Product Weight (KG)	29
Product Width (mm)	590
Product Height (mm)	810
Product Depth (mm)	445
Product Length (mm)	0
Primary Packed Measurements	
Packaged Weight	32.5
Packed Length	520
Packed Width	665
Packed Height	835
Packaging Weights	
Card (kg)	2.4
Paper (kg)	0.012
Wood (kg)	0
Plastic (kg)	0.1
Compliance DOP	N/a

General Information	
Construction Material	MFC & Painted MDF
Installation type	Wall Mounted
Colour / Finish	Blue
Furniture Attributes	
Supplied Fully Assembled	Yes
Number Of Drawers	0
Number Of Doors	2
Soft Close Doors / Drawers	Yes
Moisture resistant	Yes
Internal Shelves	1
Door Opening Width (mm)	530
Draw Opening Distance (mm)	N/a
Recommended Concealed Cistern	N/a
False Draws	No
Number of False Draws	0
Can the door be swapped over to open the oppersite way	N/a
Which side is the door hinge located	Both
Compatible Furniture Part Code	Empire
Compatible Basin Part Code	THIN600BASIN
Handles	
Handle Style	Recessed
Handle Finish	N/a
Handle Material	N/a
Number of Handles	2

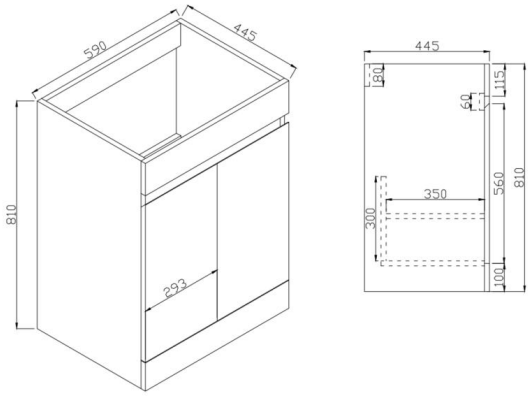

Dimensions

(measurements in mm)

LIFETIME GUARANTEE

We are confident in our products and we want our customer to be, we proudly give a lifetime guarantee on our taps and showers, further details can be found on our website.