LED SMART MIRROR

BELINI-LED-600

Mirror Φ600mm

INSTRUCTION MANUAL

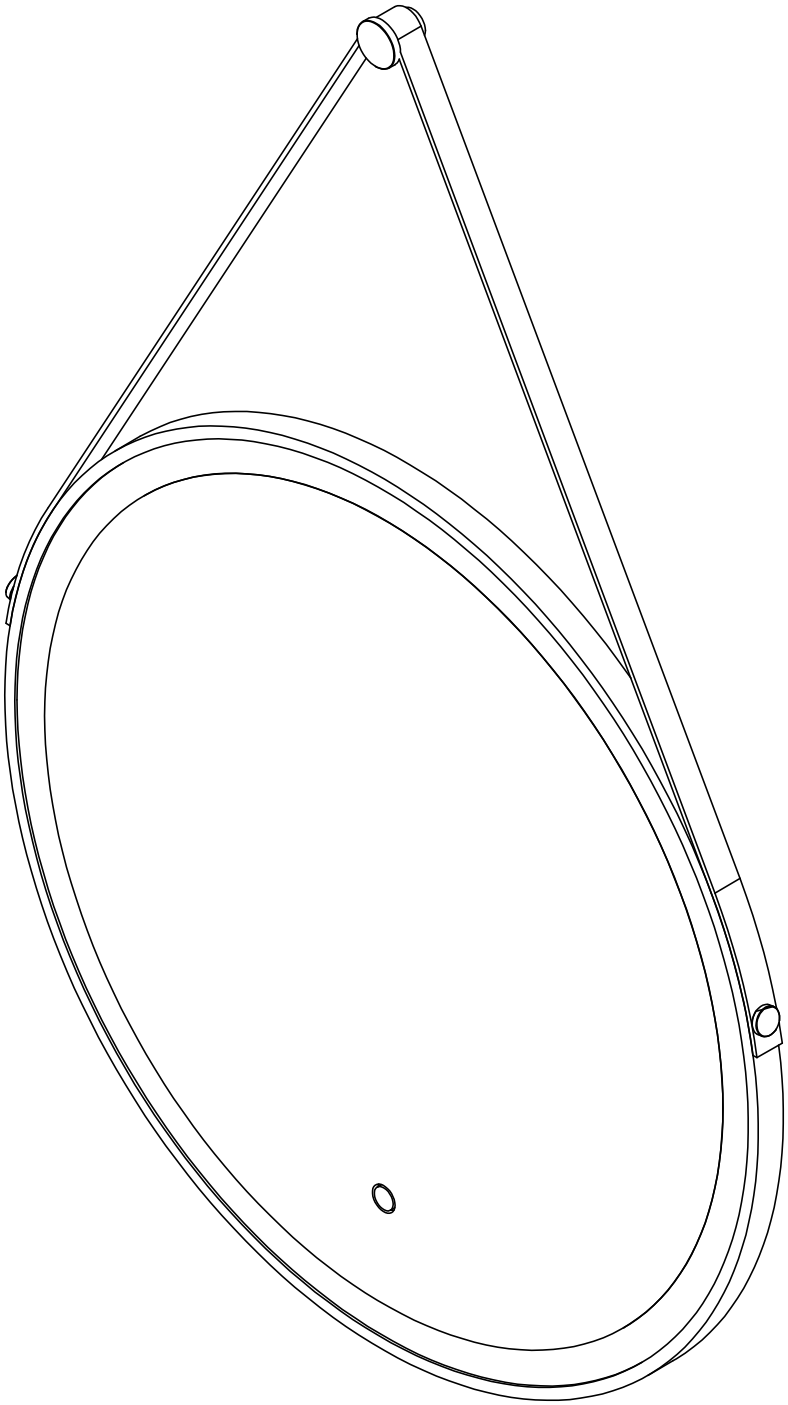

Please Note:This specification applies to touch switch LED smart mirrors

LED SMART MIRROR

BELINI-LED-600

Mirror Φ600mm

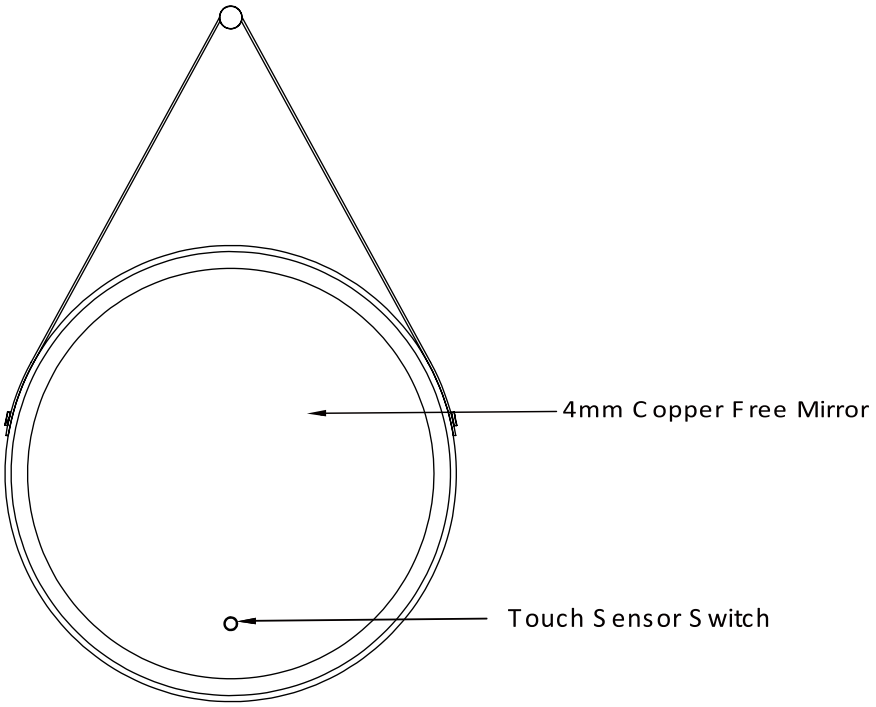

Front view

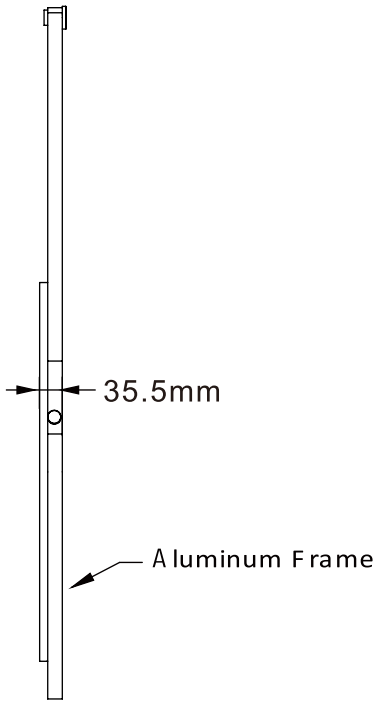

Side view

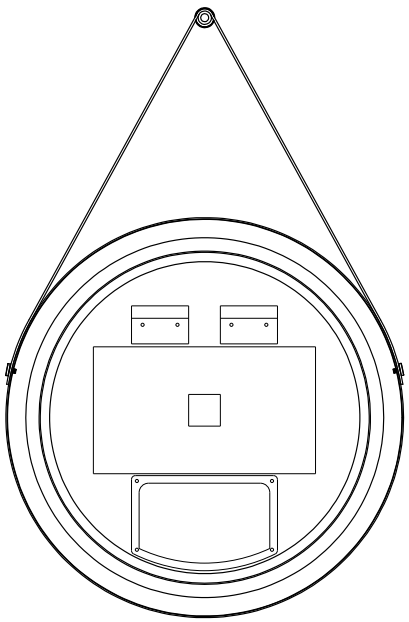

Back view

Technical Details

Heated De-mister Pad

This mirror comes with a demister pad,which heats the surface of the mirror above room temperature removing the mist on surface.

Touch Sensor On/Off Switch

The touch sensor switch can be used to Turn Led Lights and Demister On / Off. Touch the sensor switch located on the mirror face

Change the Colour of Led Light

This mirror comes with colour changing led strips (2700k to 6500k).You can long press the touch sensor to change colour from warm(2700k) to white(6500k).

Portrait Mounting

You can hang this mirror in Portrait position using the hanger provided on the back of mirror.

Electrical Safety Information

We recommend that all electrical bathroom products should only be fitted by a qualified - Part P registered electrician in accordance with the current IEE Regulations.
Please ensure the Mains supply is switched off before attempting installation.
Before drilling ensure there are no hidden cables or pipes in the wall.

Installation Information

We recommend that you receive the product before commencing with installation as all sizes and measurements are approximate.
We try to ensure all measurements are as accurate as possible.
In the interest of continued product development, we reserve the right to alter specifications as necessary.E & OE.

LED SMART MIRROR

BELINI-LED-600

Safety & Installation Notes

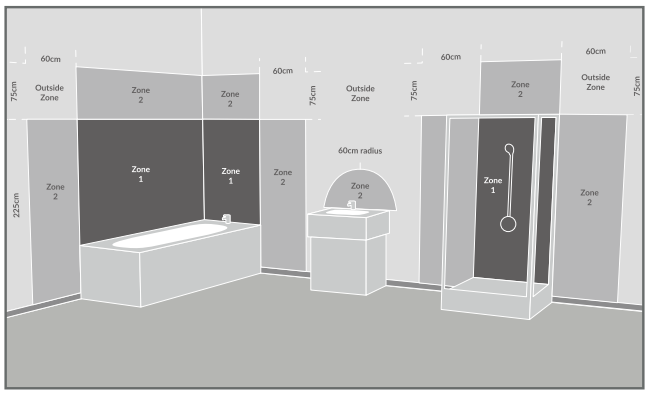

Thank you for purchasing this Product

Please read these instructions thoroughly and refer back to them during installation to ensure product safety.

Retain this leaflet for future reference

Before installation ,ensure the domestic electrical mains supply is switched off.Before drilling ,ensure there are no hidden cables or pipes in the wall.

These products are suitable for installation in zones: 2 & Outside Zone

All installations must comply with guidelines which are based on a zonal concept.The diaggram above illustrates this concept and must be followed to ensure the safe installation of Electrical appliances in the bathroom .These regulations apply to domestic installations only. Installations must be made in accordance with the current IEE wiring regulations and relevant building requlations.We recommend that all electrical bathroom products should only be fitted by a suitably qualified, Part P registered electrician.

Installation

1. Position the Mirror in a suitable location according to the Zonal diagram above ensuring that the the electrical entry point of the product.
2. Carefully mark the position of the mirror using a soft pencil ensuring its level. Remove the mirror and mark the mounting points, Please ensure that all the mounting points accurately match up with the fixing points on the mirror .
3. Using a suitable drill bit, drill holes in the marked positions to suitable depth.If drilling through tile, use a ceramic drill bit.
4. Insert wall plugs level with the surface of the wall, If fitting to a tiled surface. wall plugs should be inserted below the tiled surface to avoid cracking. For plasterboard walls, special fixings should be purchased, available from any DIY or hardware store.
5. Ensure the domestic electrical mains supply to which the mirrors being connected is turned off. Connect the domestic mains supply to terminal box according to the wiring diagram.
6. Hang the mirror in portrait position .
7. Switch on the domestic electrical mains supply for the mirror

Operating Instructions

To turn on the light, touch the sensor button. Long press the sensor to change color from warm to cool white.
The Heated Pad is Only ON when the mirror is illuminated.

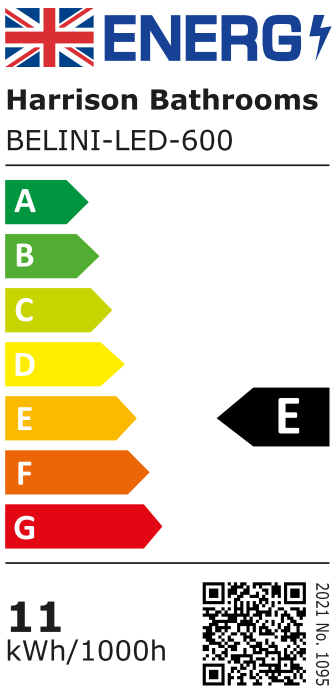

Care Instructions

Do not use abrasives or solvents when cleaning this product.Wipe off all water spillages as soon as possible using a soft, damp cloth.

Aftercare Service

In the unlikely event that this product should fail ,please contact our customer service

Installation Instructions

General Information

This product conforms to U.K. safety standards and must be installed in accordance with the current IEE Wiring and Building regulations(Part P).

Ensure that connections are turned off at the consumer unit or fuse board before installing or carrying out any maintenance.

This product is for indoor use only.

This product is IP44 rated and can be installed in bathroom zone 2(Defined by the IEE wiring regulations) and beyond.

Important

When working at heights, please use a suitable platform to work from.

Please Note:

For the new installations, check for any electrical cables or pipe work(gas/water) in the vicinity of the intended mounting point before proceeding with the installation.

Ensure that the fixing location is able to take the weight of the complete fitting.

Wear suitable eye protection when drilling.

Be careful when using power tools near water.

Do not strike the mirror glass with hard or pointed items.It is recommended that the product is cleaned with a soft and non abrasive cleaning cloth.

Do not use abrasive materials on any type of finished surface .

Do not allow moisture to come in contact with the working electrical components.

Compliance

This product complies to CE & UKCA standards.

Installation Procedure

Notes: To ensure the normal use of products, it is required you set out wires as per the regulations of IEE at the installation places. The Products are only applicable to being installed on the indoor solid wall.The installation must be carried out by a professional electrician and wrong installation may lead to product damage and personal injury.

Installation Tools

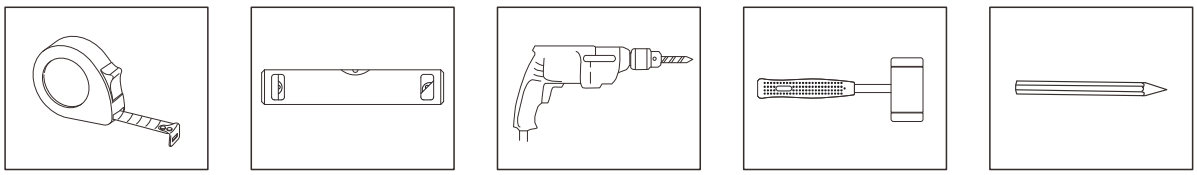

Tape measure Spirit level Drill Hammer Pencil

It is recommended that this product is installed by two people.

1. Make certain the wall is solid, and use the Tape measure to measure the distance between two hangers on the back of the mirror ("a" in Fig. 1).
2. Use the Tape measure to measure the distance 'a' on the wall and mark them out with a pencil
3. Choose a drill with an appropriate drill bit to make four holes at the marked places, and use an appropriate drill bit for the wall surface.
4. Use the hammer to strike an expansion rubber plug into the holes on the wall, and then screw the bracket into the hole (Fig. 2).
5. Switch off the power, and then use a terminal block to connect the two-core exposed wires with those reserved on the wall (see details in Fig. 4).
6. Hang the product on the wall brackets (Fig. 3).
7. Finally switch on the power, and then touch the sensor switch to test the products.

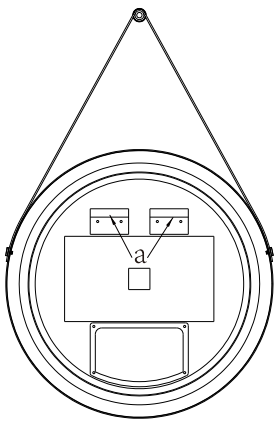

Fig. 1

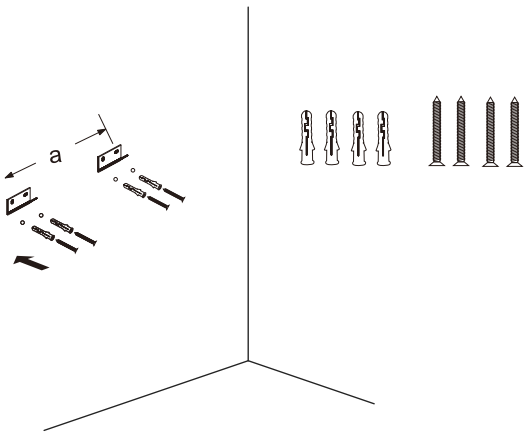

Fig. 2

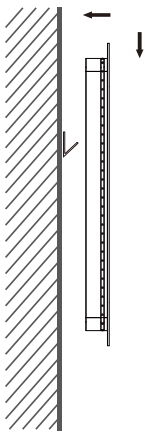

Fig. 3

Wiring Diagram for Input

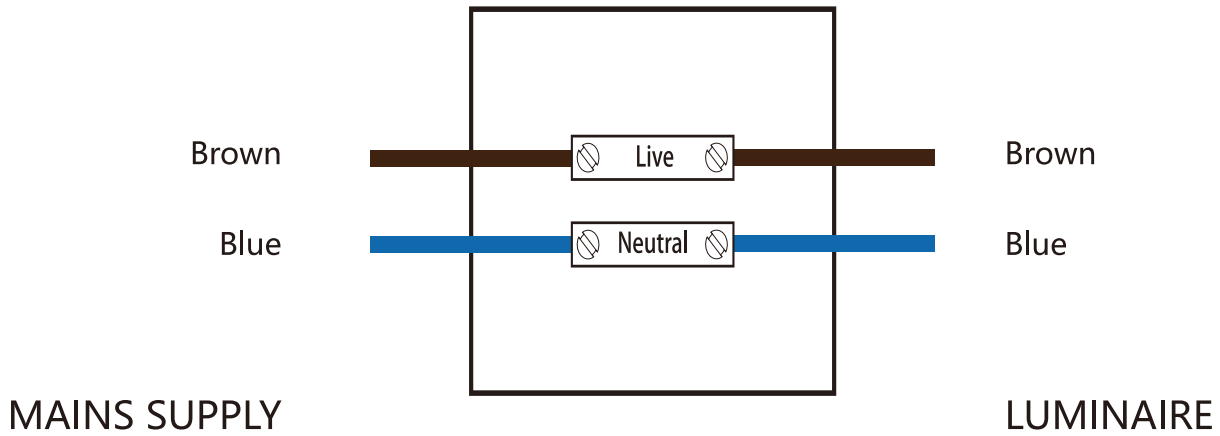

Fig. 4

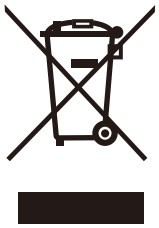

Waste Electrical & Electronic Equipment Regulations (WEEE) requires that any of our products showing this mark (left) must not be disposed off with other household or commercial waste. We do not levy any WEEE disposal charges to its customers for affected WEEE related products. To prevent possible harm to the environment or human health from uncontrolled waste disposal, please separate any such product from other waste types and recycle it responsibly at your local facilities. Check with your Local Authority, Recycling Center or retailer for recycling advice.

LED SMART MIRROR

BELINI-LED-600

LED Mirror FAQ's

Mirror Weight (kg)	3.95kg
Mirror+Box Weight (kg)	6.15kg
Light Source	LED
Light source average span	50K HOURS
Total Rated Wattage (W)	22.6W
Lumens(Lm)	1436
Kelvins(K)	2700-6500K
Is the mirror Dimmable?	YES
Energy Rating	E
What orientation can the mirror be hung in ?	PORTRAIT
Is the heated pad on when the mirror is illuminated ?	YES
Does the mirror require an earth connection?	NO
Can i bypass the sensor so the mirror comes on with the main room light?	NO
Is it cool white or warm Illumination ?	WARM TO COOL WHITE

Electrical Safety Information

We recommend that all electrical bathroom products should only be fitted by a suitably qualified, Part P registered electrician in accordance with the current IEE regulations. Ensure mains power supply is turned off before starting installations.Before drilling ensure their are no hidden pipes or cables in the wall.

We recommend you receive the product before commencing installation as all the measurements and sizes are approximate.We try to ensure that all measurements are as accurate as possible.In the interest of continuous product development,we reserve the right to alter specification as necessary.E & OE.

Child Safety Notice

Please note that you are 100% legally responsible for your own child's safety at home. Once installed, the mirror can become a hazard for children as this mirror is not designed to support unreasonable extra weight. We must stress that you should not allow children to climb/grab/play with the mirror or cabinet, as this can cause accident or injury for the child from failing, or the mirror being pulled off the wall.

Before installing the product, please read carefully the following WARNINGS:

- Special care must be taken if children or vulnerable adults are present;
- Children must be kept away from this appliance unless they are constantly supervised. Children should not play with the appliance. Cleaning and maintenance should not be performed by children.
- Installation should only be completed be a qualified person.
- Brackets kit includes standard wall-plugs suitable for solid walls only! Please use suitable fixings and bracing for non-solid walls.
- To prevent damage to the product, remove packaging carefully.
- To prevent the deterioration of the finish, do not hang humidifiers made of porous or corrosive materials on the mirror.
- Clean the mirror with a damp soft cloth. Never use corrosive or abrasive cleaning agents based on acidic substances.
- The company is not liable for any damage to persons or properties, due to non-compliance with the above.