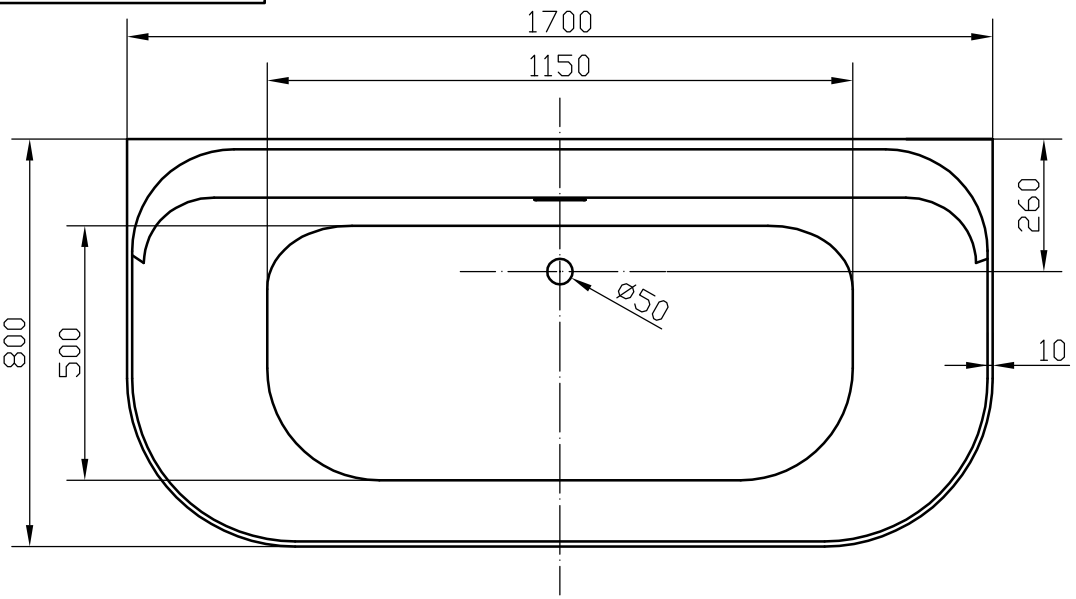


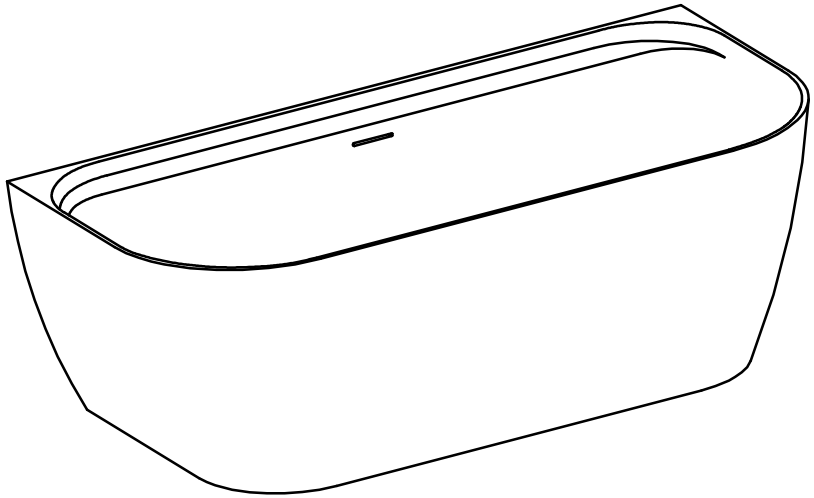

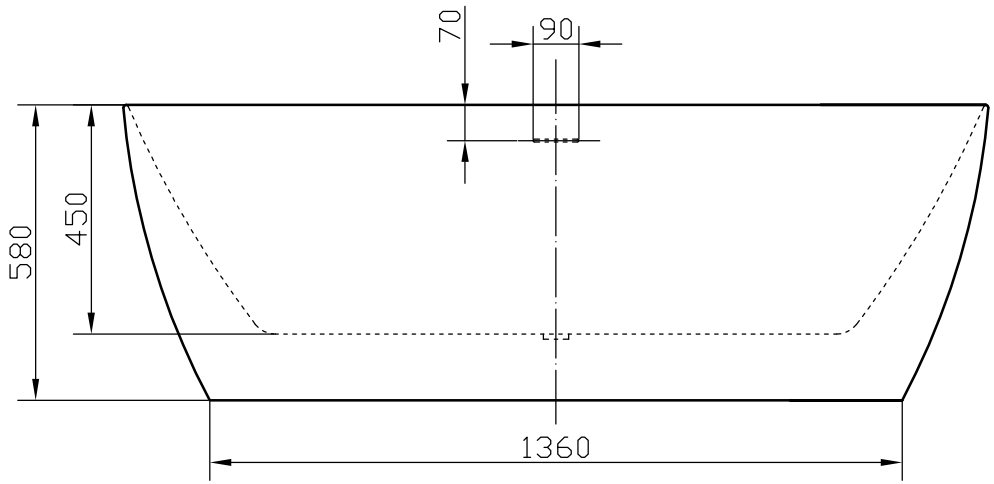


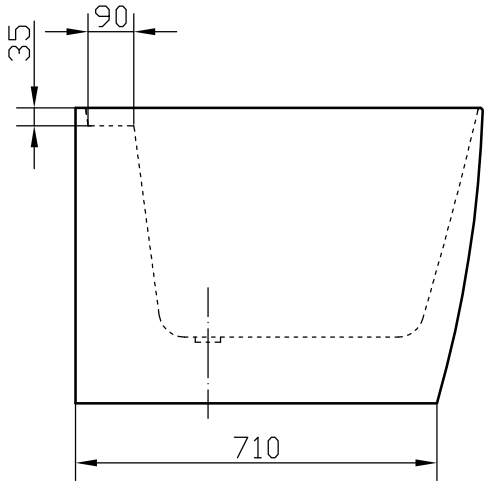


BATH-009