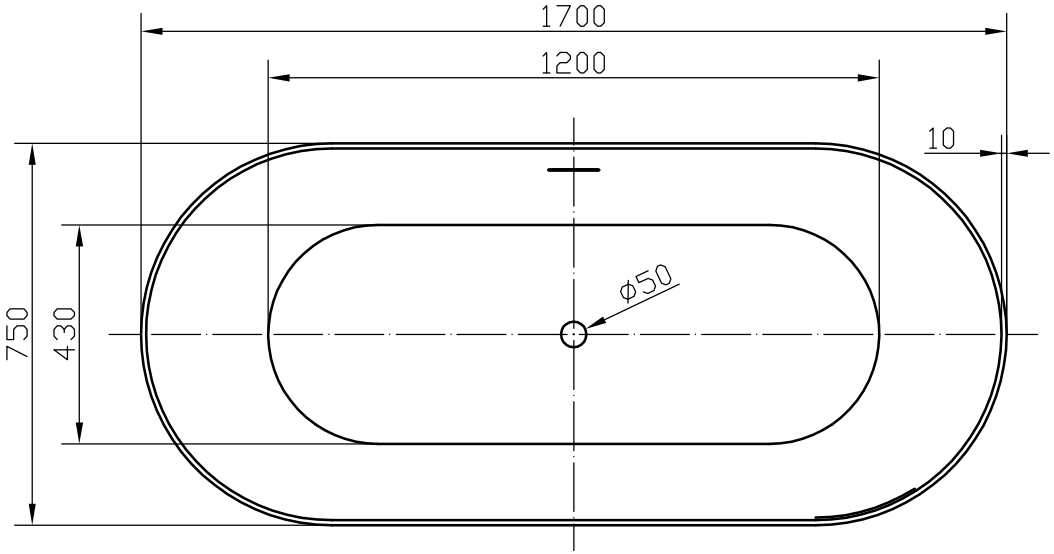

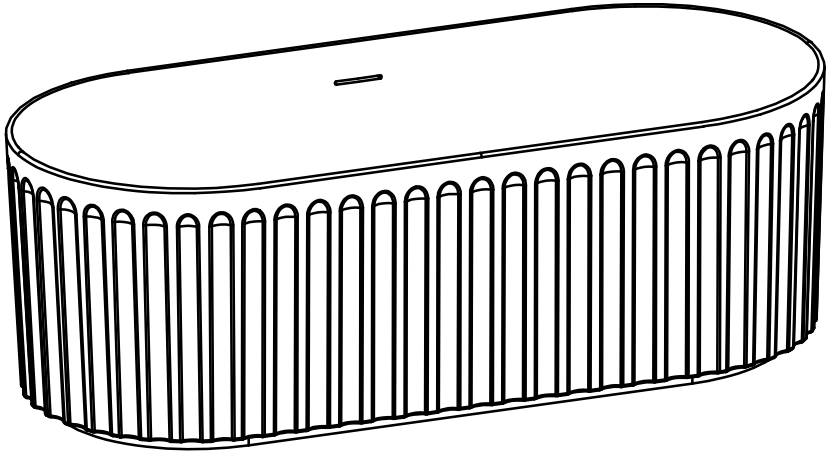

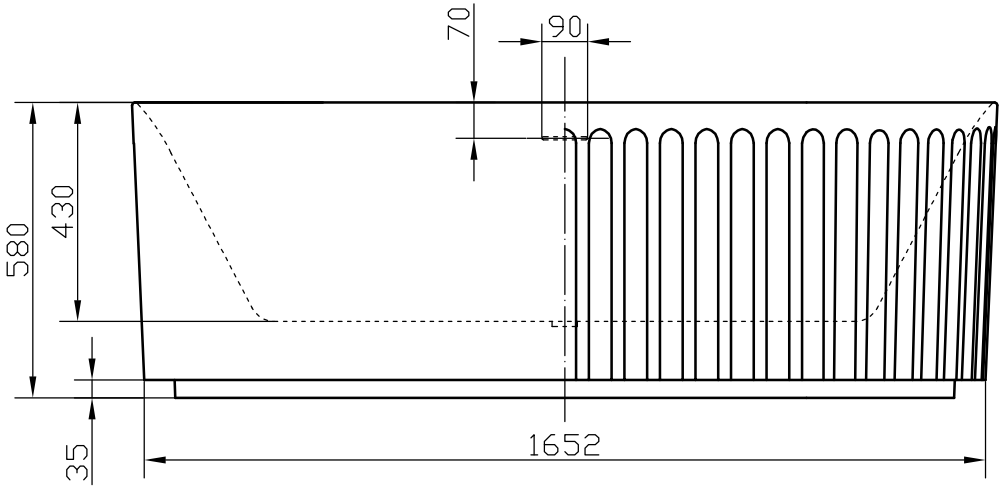

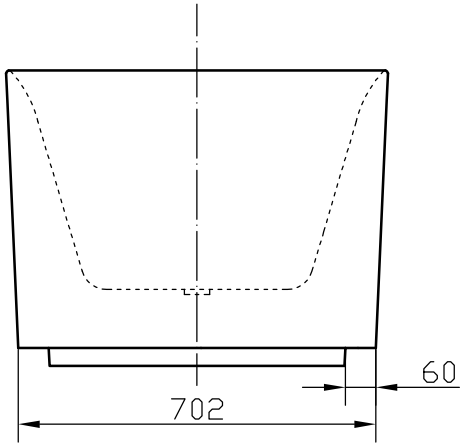

BATH-008