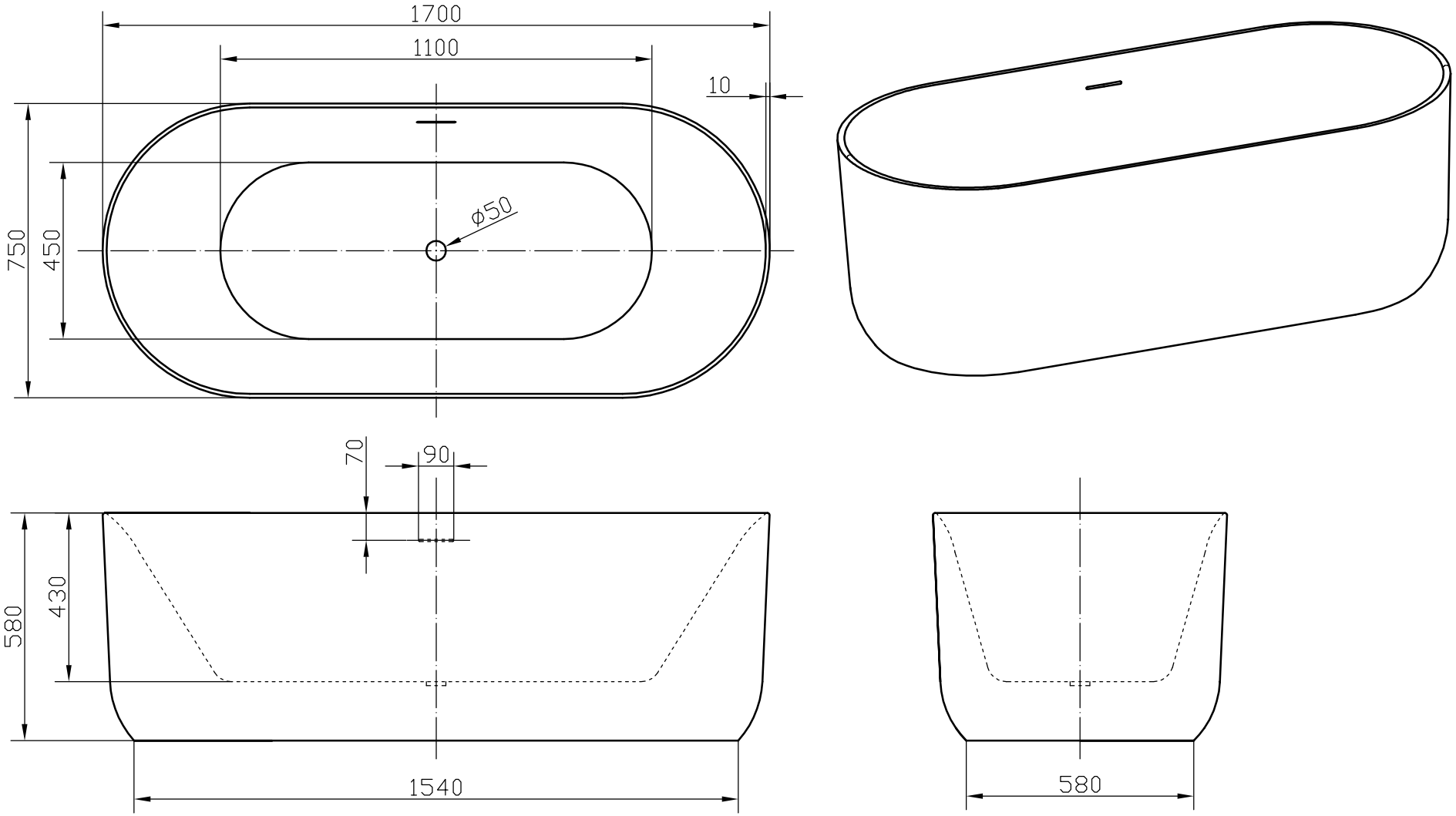

BATH-007